CFMOTO ZFORCE1000

Material: Aluminium

Main parts of skid plate set

Part name	Part number	Fitting
Main part	40.3759	11 x Screw M6x20 13 x Screw M6x30
		8 x Screw M8x16 58 x Screw M8x20
		24 x Washer 6 32 x Washer 8
		32 x Washer 8G 60 x SD 28000
		2 x Bolt M8x20 4 x Nut M6
		1) 2 x Spec washer 2) 2 x Threaded insert
		3) 4 x Bracket 4) 2 x Bracket
		5) 2 x Bracket 6) 2 x Bracket
		7) 1 x Bracket 8) 2 x Clamp
		9) 2 x Bracket 10) 2 x Bracket
		11) 6 x Bracket 12) 2 x Bracket right

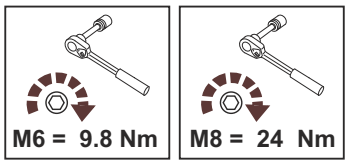

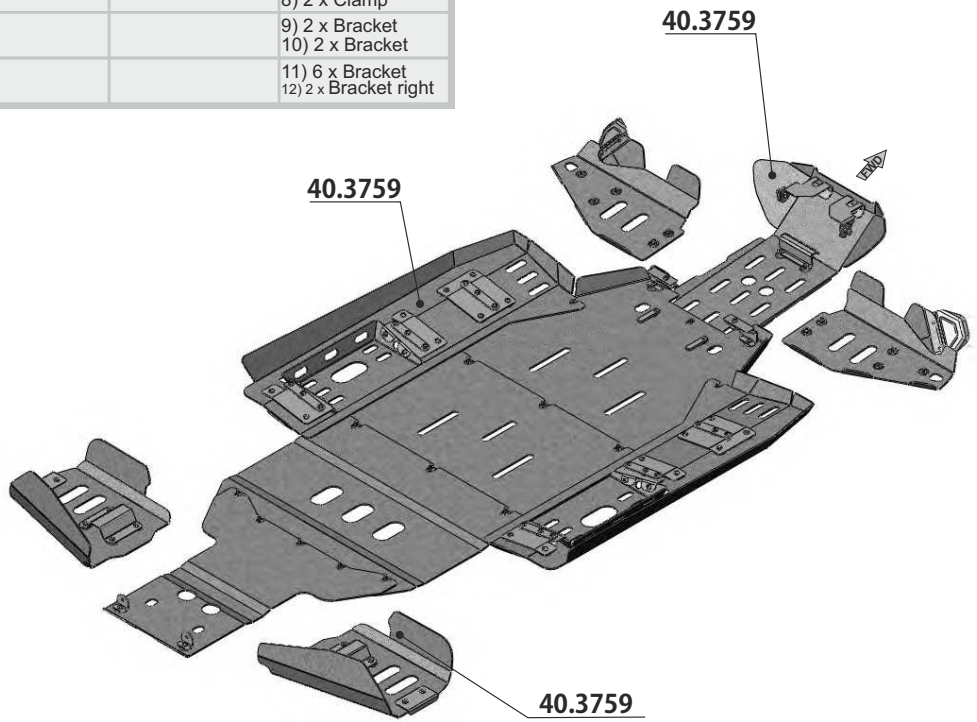

CF MOTO ZFORCE 1000 Installing the skid plate.

1. Remove the regular plastic duster.
2. Install the brackets "5, 6, 10" on the frame of the ATV as show on the scheme.That install the brackets "5" you need unscrew the lower bolts lower bolts of the plastic body kit front of the ATV, and, pushing aside the plastic, fix the bracket using bolts with washers as shown on the scheme. Install the brackets "10" under a regular fasteners of the tow bar.
3. Put inside the brackets supporting the side steps of the ATV, the brackets "11" and fix them on the bracket using secondary threaded hole.
4. Install the brackets "3,4" on the created mounting points. The screws not tighten.
5. Sequentially set the details of the skid plate "A" and "B" using the bracket "7" on the created and regular fixing points. The screws are not fully tighten.
6. Install the details of the side steps protection "F".
7. Install the side steps protection on the created fixing points. The front edge of the side steps protection is got under the detail "B". The fixing groove the side steps protection combined with the fastenersof the detail "B".
8. Consistently install the parts "C, D, E" . The front edge of each part is put on the rear edge of the already installed detail.
9. Correct the relative position of the parts, tighten the fasteners.
10. Install the front and rear A-arms protection, using the fasteners as shown on the scheme.
11. Tighten the fasteners; put in place and tighten lower bolts of the plastic body kit front of the ATV.

www.stormprotect.ru; www. storm-protect.com

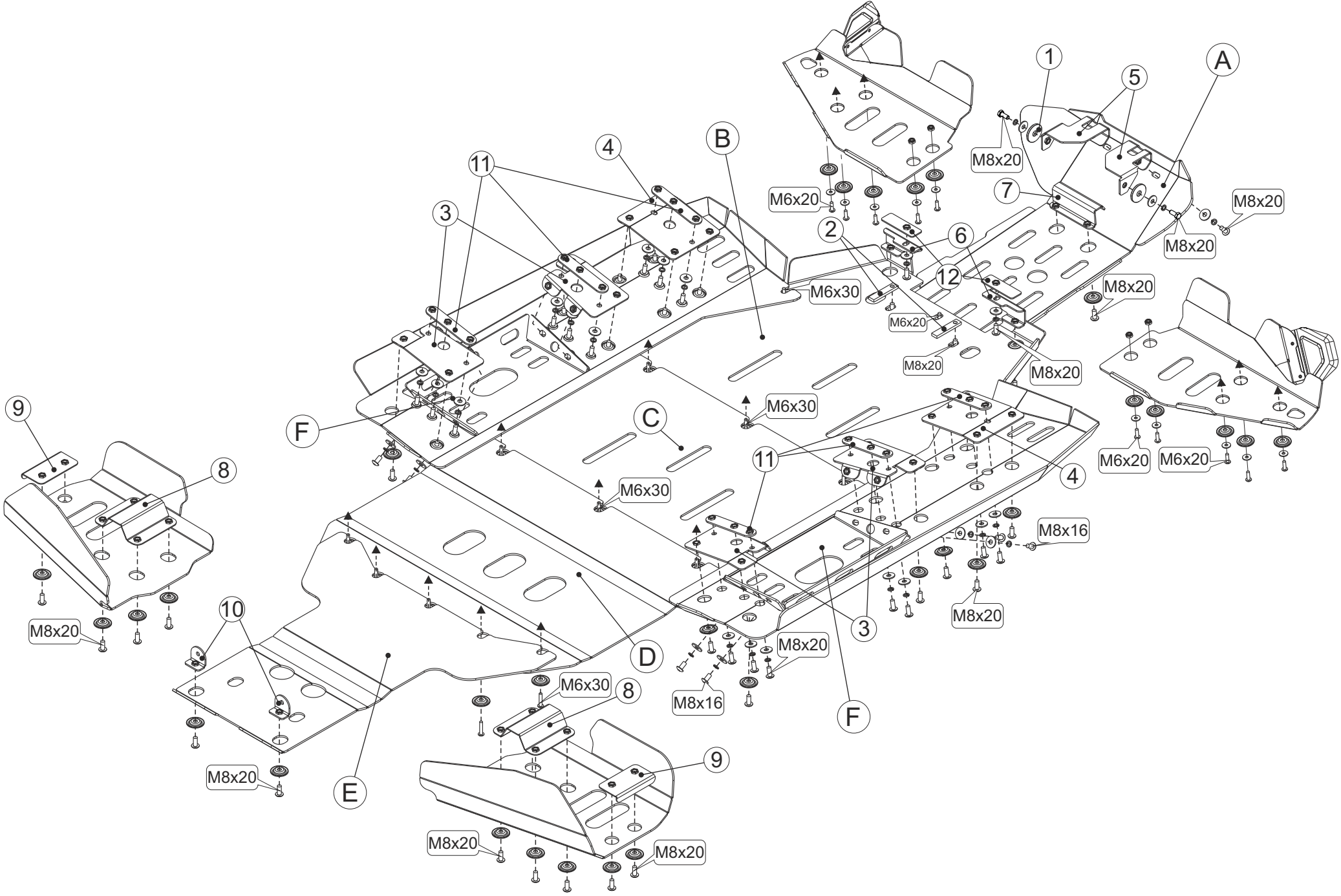

1
5
A
M8x20
M8x20
M8x20
7
M6x20
2
6
12
M8x20
M6x30
M6x20
M8x20
M8x20
B
4
11
3
F
C
M6x30
M6x30
11
4
M6x20
M6x20
9
8
M8x16
M8x20
M8x20
10
3
D
M8x20
M8x16
F
M6x30
8
9
M8x20
E
M8x20
M8x20